Adventures in Faerûn: Siege of the Mind Flayer

Project Status

Enter address here

CLIENT NAME	CONSULTANT 01	CONSULTANT 02	CONSULTANT 03	CONSULTANT 04	CONSULTANT 05
ADDRESS SUITE ## CITY, STATE ZIP, ###.###.####	ADDRESS SUITE ## CITY, STATE ZIP, ###.###.####	ADDRESS SUITE ## CITY, STATE ZIP, ###.###.####	ADDRESS SUITE ## CITY, STATE ZIP, ###.###.####	ADDRESS SUITE ## CITY, STATE ZIP, ###.###.####	ADDRESS SUITE ## CITY, STATE ZIP, ###.###.####

0 6" 1' 2'
1" = 1'-0"

0 6" 1' 2'
1" = 1'-0"

0 6" 1' 2'
1" = 1'-0"

PROJECT DESIGNED FOR:

CLIENT LOGO

PROJECT NAME:

Adventures in Faerûn: Siege of the Mind Flayer

CONSULTANT LOGOS

ARCHITECT/ENGINEER STAMP:

NOT FOR CONSTRUCTION

NO.	DESCRIPTION	DATE

SHEET NAME:

COVER

DRAWING NO.:

D-000

ABBREVIATIONS

ABBRV.	DESCRIPTION
A	
AB	ANCHOR BOLT
ALUM.	ALUMINUM
AP	ANIMATED PROP
A.C. or A/C	AIR CONDITIONING
ABV	ABOVE
ARCH	ARCHITECTURAL / ARCHITECTURE
B	
BD or BRD.	BOARD
BLDG	BUILDING
BLK	BLOCK
BM	BEAM
BOT	BOTTOM
B.O	BOTTOM OF ...
C	
C/C	CENTER TO CENTER
CCTV	CLOSED CAPTION TELEVISION
CFI	CONTRACTOR FURNISHED ITEM
CF/CI	CONTRACTOR FURNISHED/CONTRACTOR INSTALLED
CI	CONTRACTOR INSTALLED
CLG	CEILING
CL	CENTERLINE
CLR	CLEAR
CSK	COUNTERSINK
COL	COLUMN
CONC	CONCRETE
CONN	CONNECTION
CONSTR	CONSTRUCTION
CONT	CONTINUOUS
CORR	CORRIDOR
D	
DEG	DEGREE
DBL	DOUBLE
DET or DETL	DETAIL
DIA	DIAMETER
DIAG	DIAGONAL
DIM	DIMENSION
DIR	DIRECTION
DN	DOWN
DO	DOOR OPENING
DR	DOOR
DWG	DRAWING
E	
ELEC	ELECTRICAL
ELEV or EL	ELEVATION
EQ	EQUAL
EQUIP	EQUIPMENT
EER	ELECTRICAL EQUIPMENT ROOM
EXIST or (E)	EXISTING
EXT.	EXTERIOR
F	
FAC	FACILITY
FEC	FIRE EXTINGUISHER CABINET
FIN	FINISH
FLR	FLOOR
F.O.	FACE OF
F.O.C.	FACE OF CONCRETE
F.O.S.	FACE OF STUD
FOUND	FOUNDATION
FRP	FIBER-REINFORCED PLASTIC
F.S.	FULL SIZE
F.S.D.	FULL SIZE DETAIL
G	
GA	GAUGE
GC	GENERAL CONTRACTOR
GFRC	GLASS FIBER REINFORCED CONCRETE
GFRG	GLASS FIBER REINFORCED GYPSUM
GL	GLASS
GALV	GALVANIZED
GR	GRADE
GYP BD	GYPSUM BOARD
H	
HORIZ	HORIZONTAL
HVAC	HEATING,VENTILATION, AIR CONDITIONING
I	
I.D.	INNER DIAMETER
INSUL	INSULATION
INT.	INTERIOR
IC	INTERCOM
IR	INFRARED

ABBRV.	DESCRIPTION
M	
MAINT	MAINTENANCE
MAT'L	MATERIAL
MAX	MAXIMUM
MDF	MEDIUM DENSITY FIBERBOARD
MECH	MECHANICAL
MEZZ	MEZZANINE
MFR	MANUFACTURER
MISC	MISCELLANEOUS
MIN	MINIMUM
MTL	METAL
N	
(N)	NEW
NO.	NUMBER
NTS	NOT TO SCALE
O	
O.C.	ON CENTER
O.C.C.	OPERATOR CONTROL CONSOLE
O.D.	OUTER DIAMETER
OF/CI	OWNER FURNISHED/CONTRACTOR INSTALLED
OF/VI	OWNER FURNISHED/VENDOR INSTALLED
P	
PERF	PERFORATED
PLAST	PLASTIC
PLYWD or PLY	PLYWOOD
POS	POINT OF SALE
PR	PAIR
PROJ	PROJECTOR
PSI	POUNDS PER SQUARE INCH
PVC	POLYVINYL CHLORIDE
Q	
Q	QUEUE
R	
R	RIDE
R or RAD	RADIUS
REF	REFERENCE
REINF	REINFORCED
REQ'D	REQUIRED
RES	RESILIENT
RM	ROOM
RO	ROUGH OPENING
S	
SECT	SECTION
SFX or SPFX	SPECIAL EFFECTS
SPKR	SPEAKER
SHT	SHEET
SIM	SIMILAR
SIMUL	SIMULATED
SPECS	SPECIFICATIONS
SS	STAINLESS STEEL
STA	STATION
STD	STANDARD
STL	STEEL
SQ	SQUARE
STRUCT	STRUCTURAL
SUSP	SUSPENDED
SYM	SYMMETRICAL
T	
TBD	TO BE DETERMINED
TEMP	TEMPORARY
T&G	TONGUE AND GROOVE JOINERY
THRC	THEORECTICAL HOURLY RIDE CAPACITY
T.O.C.	TOP OF CONCRETE
T.O.S.	TOP OF STEEL
TYP	TYPICAL
T.W.	TOP OF WALL
V	
VERT	VERTICAL
W	
W/	WITH
WD	WOOD
WP	WORKING POINT
WIP	WORK IN PROGRESS

SHOW TAG SYMBOLS

AF / XX-XX	ANIMATED FIGURE
AP / XX-XX	ANIMATED PROP
FOL / XX-XX	ARTIFICIAL FOLIAGE
C-XX-XX	CAMERA / CCTV
FFE-XXX / NOTE	FURNITURE, FIXTURES AND EQUIPMENT
G-XX-XX	GRAPHICS
M / XX-XX	MURAL
OF-OI / XX-XX	OWNER FURNISHED / OWNER INSTALLED
OF-VI / XX-XX	OWNER FURNISHED / VENDOR INSTALLED
P	PROGRAMMING J-BOX
P-XX-XX	PROJECTOR
R	RIDE CONTROL
SA-XX-XX	SHOW ACTION EQUIPMENT
S	SHOW CONTROL
SL / XX-XX	SHOW LIGHTING
SS / XX-XX	SHOW SET
S / XX-XX	SPEAKER
SE-XX-XX	SPECIAL EFFECT
F / XX-XX	STATIC FIGURE
SP-XX-XX	SPECIALTY PROP
TL / XX-XX	THEME LIGHTING
	WHEEL CHAIR ACCESS
	NO WHEELCHAIR ACCESS

0-00 GENERAL NOTES - SHOWSET

1. SHOW SET DRAWINGS SERVE AS THE COORDINATION PACKAGE DESCRIBING THE FORM, FIT AND FUNCTION OF THE SHOW. THESE DRAWINGS ARE INTENDED FOR CREATIVE INTENT ONLY AND ARE NOT FOR CONSTRUCTION.
2. ALL ATTACHMENT DETAILS TO BE PROVIDED BY VENDOR DURING SHOP DRAWINGS PHASE AND CONFIRMED IN STRUCTURAL ANALYSIS/ENGINEERING BY VENDORS' LOCAL CERTIFIED PROJECT ENGINEER. ANY AND ALL ATTACHMENT DETAILING INDICATED IN SHOW SET DRAWINGS ARE PRIMARILY FOR COORDINATION PURPOSES AND ARE SUGGESTIONS AND MUST BE VETTED BY VENDOR
3. THE SHOW VENDOR SHALL REFER TO FACILITY DRAWINGS FOR STRUCTURAL, ARCHITECTURAL, MECHANICAL, ELECTRICAL, CIVIL AND AREA DEVELOPMENT INFORMATION FOR COORDINATION WITH SHOW ELEMENTS. VENDOR SHOP DRAWINGS AND STRUCTURAL CALCULATIONS WILL INFORM FINAL SHOW SETS.
4 STRUCTURAL DESIGN: DETAILS ON DRAWINGS INDICATE A DESIGN APPROACH FOR ELEMENT STRUCTURES BUT MAY NOT INCLUDE ALL FABRICATION DETAILS REQUIRED FOR THE STRUCTURAL ASSEMBLY THAT US REQUIRED OF THE ELEMENTS. IT SHALL BE THE RESPONSIBILITY OF THE FABRICATOR TO PERFORM STRUCTURAL DESIGN FOR THE ELEMENTS TO MEET LOCAL AUTHORITY HAVING JURISDICTION (AHJ) REQUIREMENTS AND ANY OWNER-IMMPOSED REQUIREMENTS INCLUDING BUT NOT LIMITED TO OVERHEAD SAFETY (RIGGING) REQUIREMENTS. STRUCTURAL DESIGN SHALL BE SIGNED AND SEALED BY A LICENSED STRUCTURAL ENGINEER AS REQUIRED BY THE AHJ AND OWNER. THE OWNER SHALL REVIEW STRUCTURAL CALCULATIONS AND DESIGN AND PROVIDE APPROVAL PRIOR TO FABRICATION.
5 IT IS THE RESPONSIBILITY OF THE VENDOR TO PROVIDE COMPLETE FABRICATION AND INSTALLATION DRAWINGS FOR EACH ELEMENT, WHICH INCLUDE DETAILED SCALE LAYOUTS WITH ALL GRAPHIC ELEMENTS, FABRICATION AND INSTALLATION DETAILS. THIS INCLUDES TYPES AND LOCATIONS OF FASTENERS, ATTACHMENTS, JOINT DETAILS, INTERNAL FRAMES, REINFORCEMENTS, SUPPORT BACKING AND CONNETION TO SUPPORT STRUCTURE OR MOUNTING SURFACES.
6 VISIBLE HARDWARE LOCATIONS SHALL BE REVIEWS AND APPROVED PRIOR TO FABRICATION.
7 VENDOR TO COORDINATE TECHNICAL EQUIPMENT INTEGRATION WITH OWNER. OWNER TO PROVIDE TECHINICAL EQUIPMENT DIRECTLY TO VENDOR OR PROVIDE VENDOR WITH A LIST OF NECESSARY TECHINICAL COMPONENTS FOR VENDOR TO PROCURE.
8 IF GRAPHICS ARE INTEGRATED INTO SHOW SET(S), VENDOR TO CONFIRM FINAL GRAPHIC OUTLINE(S) PRIOR TO START OF FABRICATION.
9 THE SHOW VENDOR SHALL PROVIDE ALL MOUNTINGS FOR SHOW LIGHTING, THEMED LIGHTING, SPEAKERS AND PWS EQUIPMENT AS WELL AS ALL CONDUITS, PULL BOXES AND CABLES PER CODE, BASE PLATES AND TEMPLATES. SHOW VENDOR SHALL COORDINATE WITH ELECTRICAL AND CIVIL REQUIREMENTS OF THE SHOW SETS, INCOMING AND OUTGOING CONDUIT IS REQUIRED FOR ALL LOCATIONS WITH CABLING. ALL SCENERY SHALL HAVE WEEP HOLES AND VENTILATION AS REQUIRED.
10 ALL ACCESS HATCHES SHALL BE LARGE ENOUGH TO ALLOW FOR ACCESS TO SHOW LIGHTING, THEMED LIGHTING, SPEAKERS, PWS EQUIPMENT AND ANCHOR BOLT INSTALLATION AS WELL AS FOR INSPECTION AND SHALL BE POSITIONED IN INCONSPICUOUS LOCATIONS AND/OR FOLLOW OWNER ART DIRECTION.
11 ALL SHOW SCENERY FOOTING DESIGN AND CONSTRUCTION SHALL BE BY OTHERS BASED ON INPUT FROM LOCAL VERIFIED PROJECT ENGINEER.
12 ALL FACILITY/FIELD CONDITIONS SHALL BE VERIFIED BY THE SHOW VENDOR PRIOR TO INSTALLATION AND SHOW VENDORS SHALL MAKE ANY MODIFICATIONS REQUIRED TO INSTALL AS PART OF BASE SCOPE.
13 ALL SHOW ELEMENTS ARE IN APPROXIMATE LOCATIONS AND SHALL BE FIELD LOCATED BY OWNER.
14 ALL MATERIALS MUST BE CLASS A RATING AND/OR BE APPROVED BY THE LOCAL AUTHORITY HAVING JURISDICTION PRIOR TO FABRICATION.
15 VENDOR TO PROVIDE MOCK-UP(S) IF OWNER REQUIRES. EXACT MOCK-UP(S) NEEDS TO BE DETERMINED.
16 ALL TOOLING PROVIDED BY OWNER OR PRODUCED BY VENDOR SHALL BE RETURNED TO OWNERS AT THE COMPLETION OF THE PROJECT.
17 REFER TO FABRICATION DRAWINGS FOR FINAL DIMENSIONS AND SIZES.
18 CONFIRM LIGHTING DETAILS IN LIGHTING PACKAGE.
19 CONFIRM TECHNICAL INTEGRATION IN AVC PACKAGE.

PROJECT DESIGNED FOR:

PROJECT NAME:

Adventures in Faerûn: Siege of the Mind Flayer

NOT FOR CONSTRUCTION

NO.	DESCRIPTION	DATE

SHEET NAME:

SYMBOLS & GENERAL NOTES

DRAWING NO.:

D-001

PROJECT DESIGNED FOR:

PROJECT NAME:

Adventures in Faerûn: Siege of the Mind Flayer

NOT FOR CONSTRUCTION

NO.	DESCRIPTION	DATE

SHEET NAME:

SHEET LIST

DRAWING NO.:

D-002

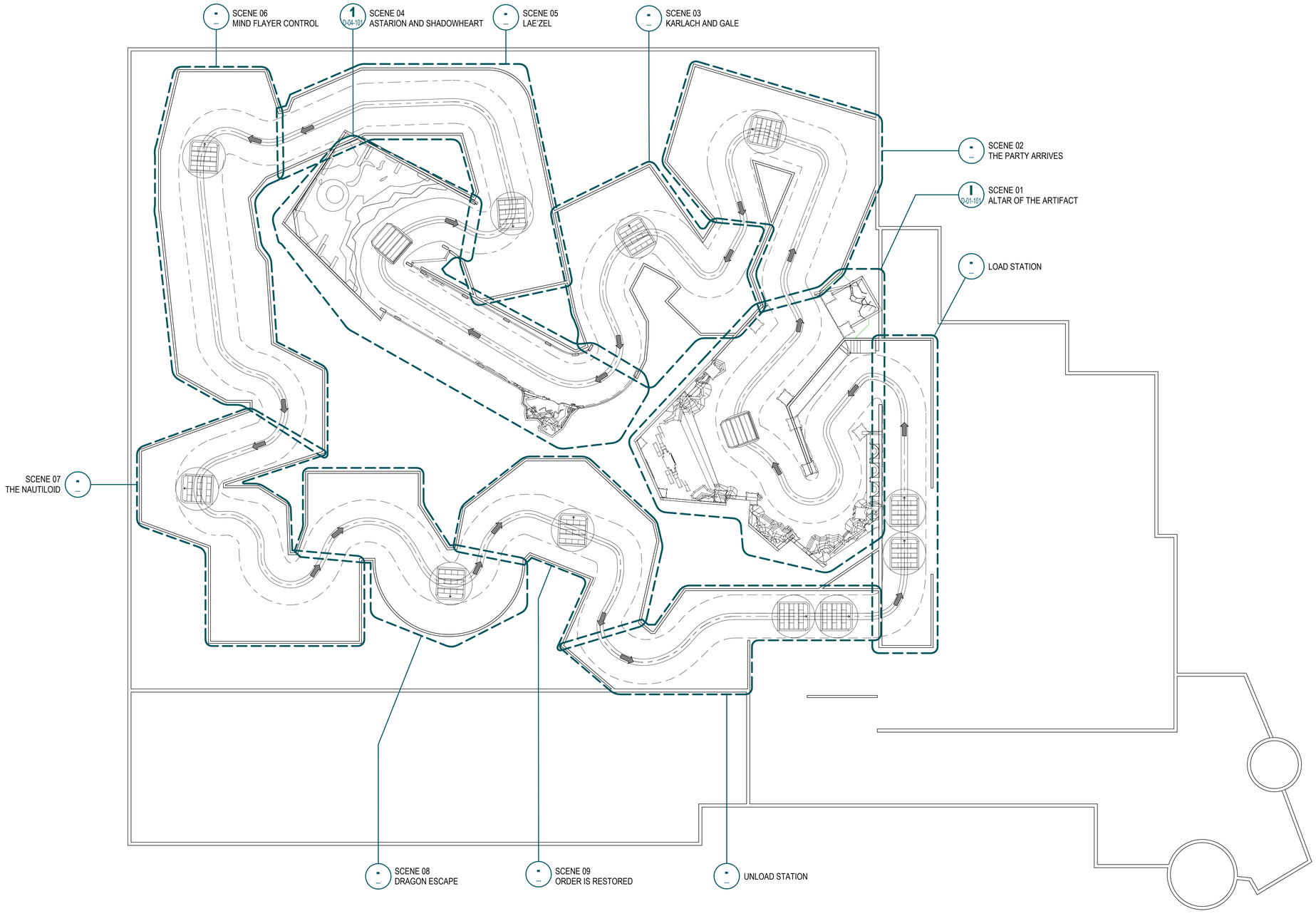

1 D-100 **OVERALL GROUND PLAN**
1/16" = 1'-0"

PROJECT DESIGNED FOR:

PROJECT NAME:

Adventures in Faerûn: Siege of the Mind Flayer

NOT FOR CONSTRUCTION

NO.	DESCRIPTION	DATE

SHEET NAME:

OVERALL GROUND PLAN

DRAWING NO.:

D-100

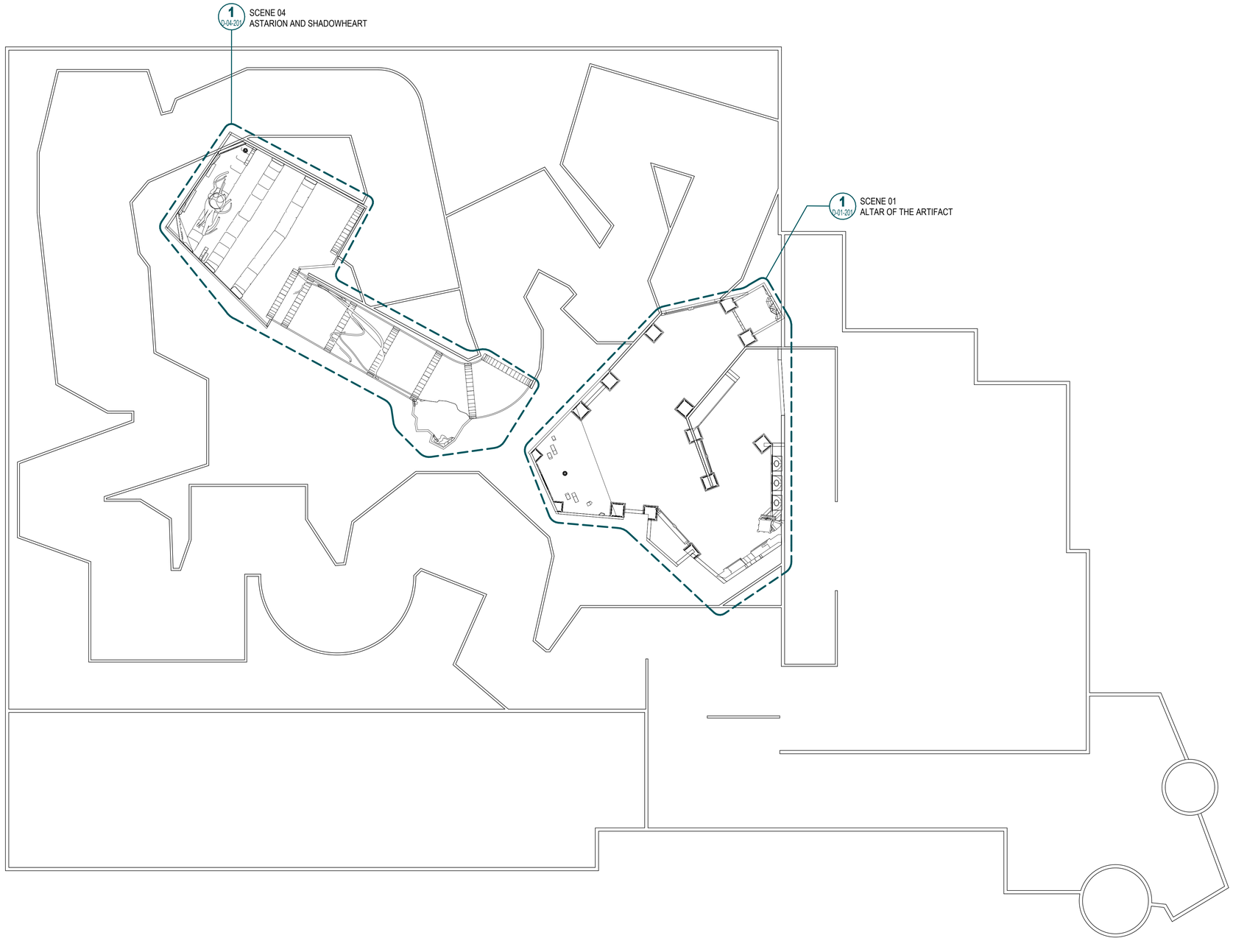

1 D-200 **OVERALL REFLECTED CEILING PLAN**
1/16" = 1'-0"

PROJECT DESIGNED FOR:

PROJECT NAME:

Adventures in Faerûn: Siege of the Mind Flayer

NOT FOR CONSTRUCTION

NO.	DESCRIPTION	DATE

SHEET NAME:

OA REFLECTED CEILING PLAN

DRAWING NO.:

D-200

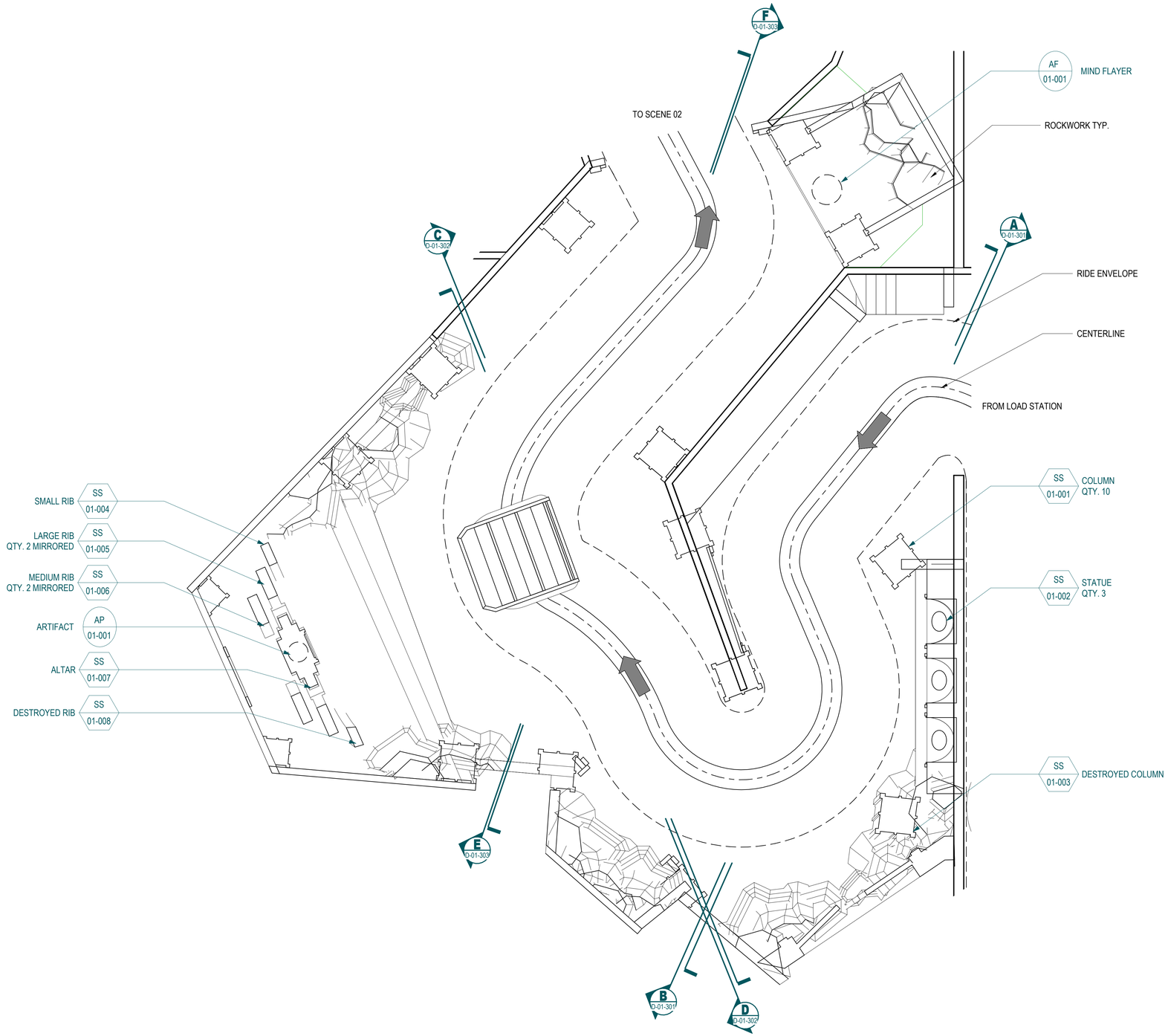

I D-01-101 **ENLARGED GROUND PLAN - SCENE 01**

3/16" = 1'-0" REF:D-100

PROJECT DESIGNED FOR:

PROJECT NAME:

Adventures in Faerûn: Siege of the Mind Flayer

NOT FOR CONSTRUCTION

NO.	DESCRIPTION	DATE

SHEET NAME:

ENLARGED PLAN - SCENE 01

DRAWING NO.:

D-01-101

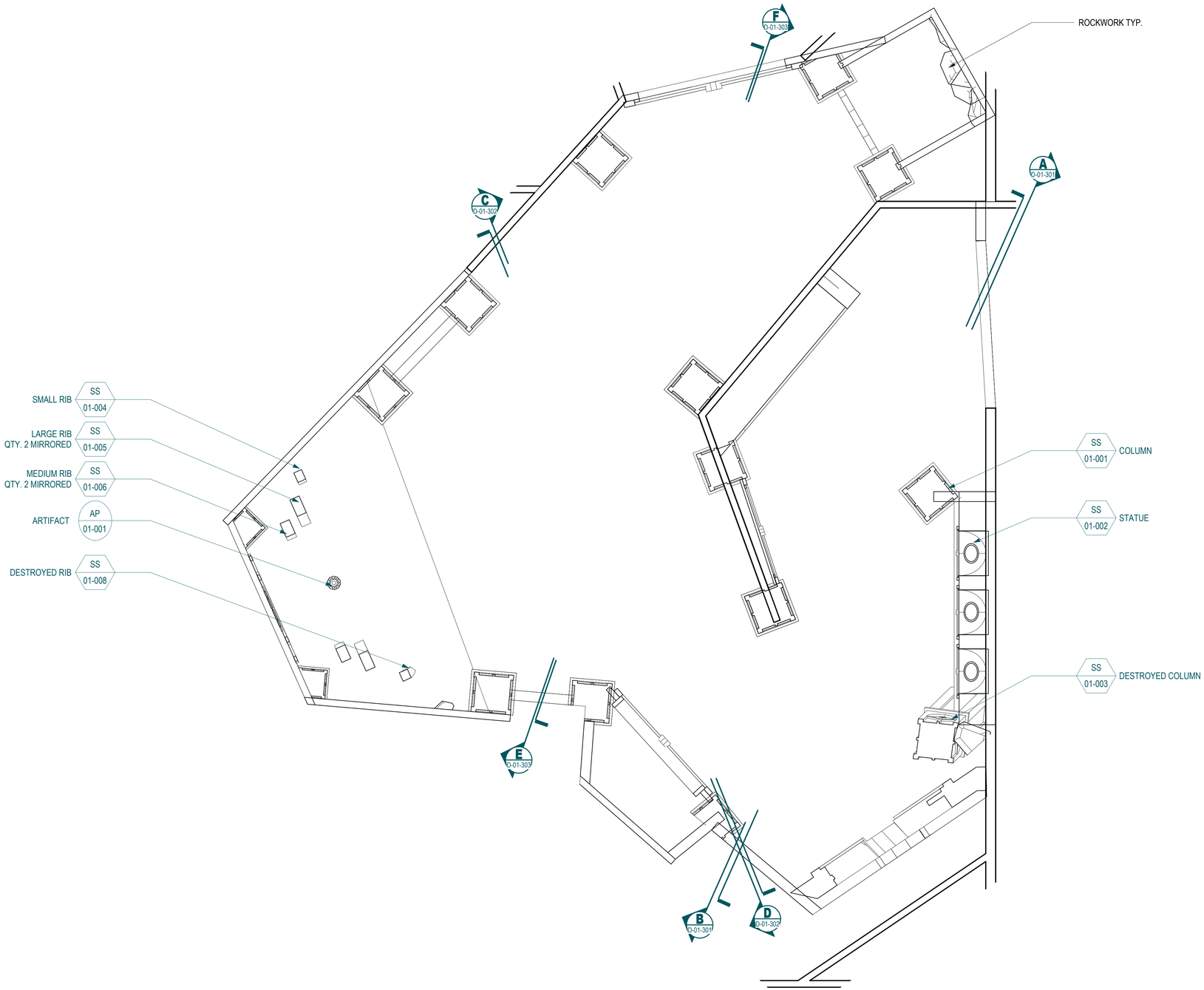

1
D-01-201

ENLARGED REFLECTED CEILING PLAN - SCENE 01

3/16" = 1'-0"

REF:D-200

PROJECT DESIGNED FOR:

PROJECT NAME:

Adventures in Faerûn: Siege of the Mind Flayer

NOT FOR CONSTRUCTION

NO.	DESCRIPTION	DATE

SHEET NAME

ENLARGED RCP - SCENE 01

DRAWING NO.:

D-01-201

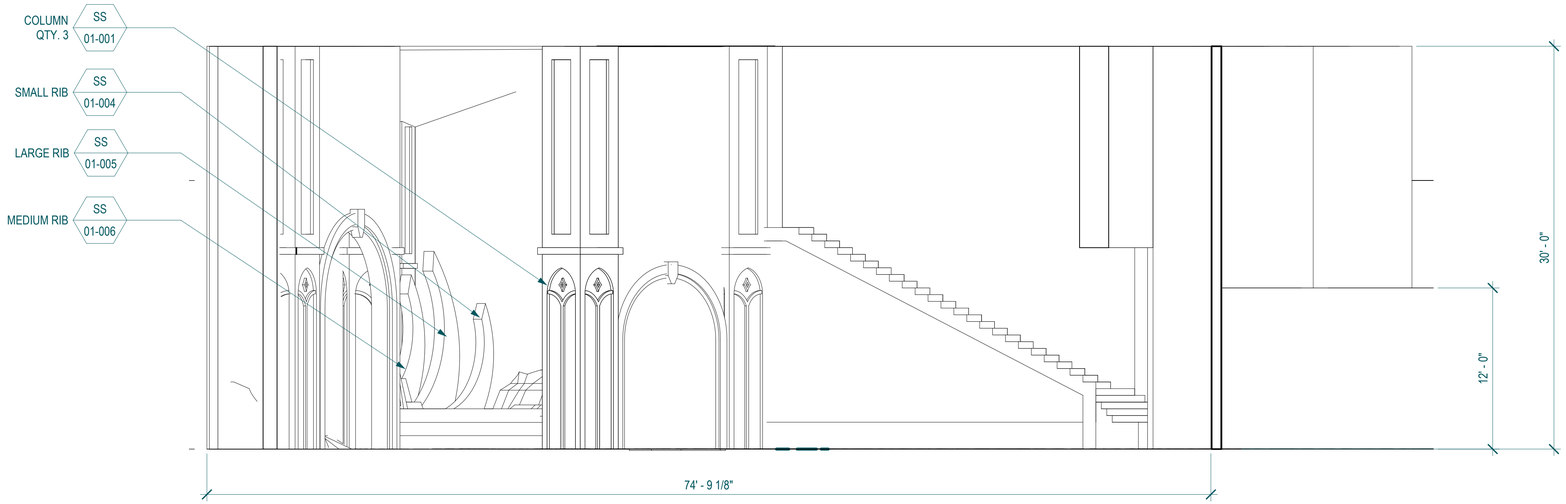

B D-01-301 **SECTION B - SCENE 01**

3/16" = 1'-0"

REF:D-01-101

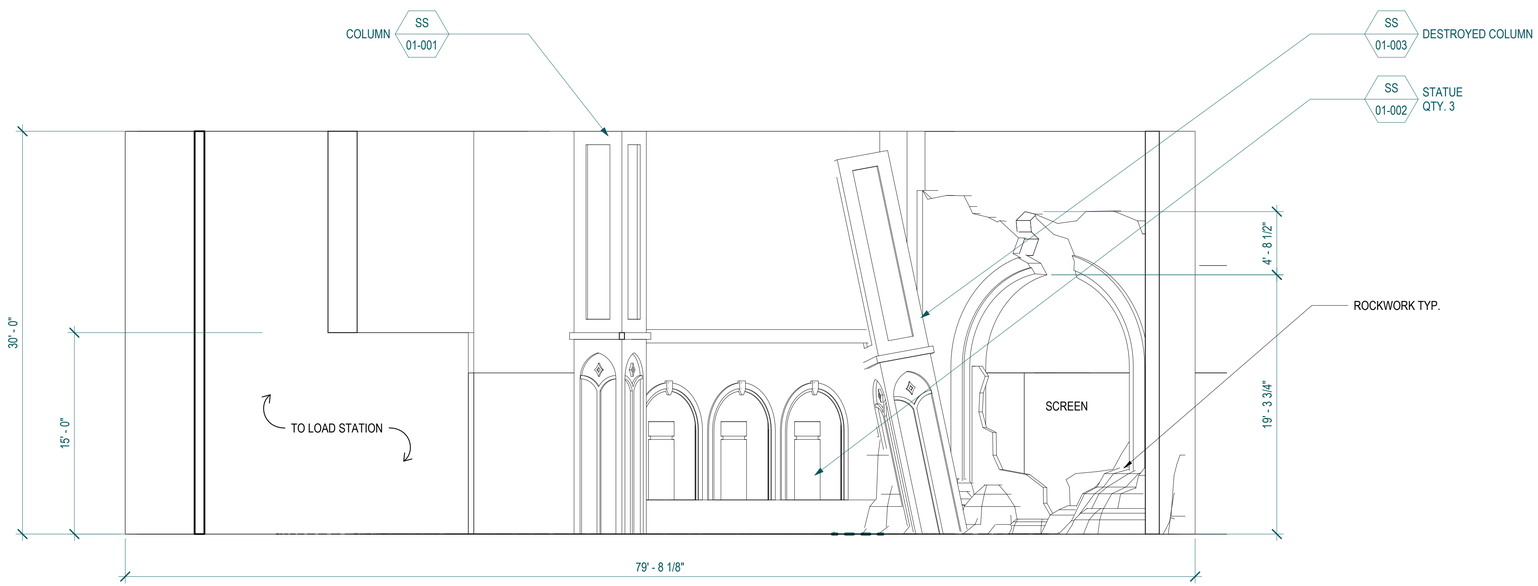

A D-01-301 **SECTION A - SCENE 01**

3/16" = 1'-0"

REF:D-01-101

PROJECT DESIGNED FOR:

PROJECT NAME:

Adventures in Faerûn: Siege of the Mind Flayer

NOT FOR CONSTRUCTION

NO.	DESCRIPTION	DATE

SHEET NAME:

SECTIONS - SCENE 01

DRAWING NO.:

D-01-301

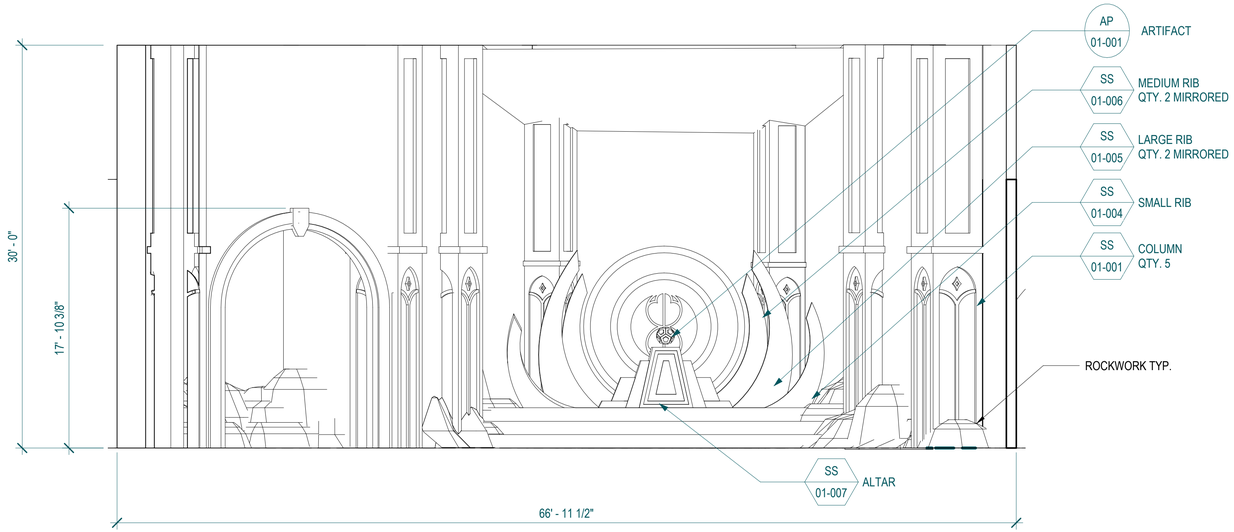

D D-01-302 **SECTION D - SCENE 01**

3/16" = 1'-0"

REF:D-01-101

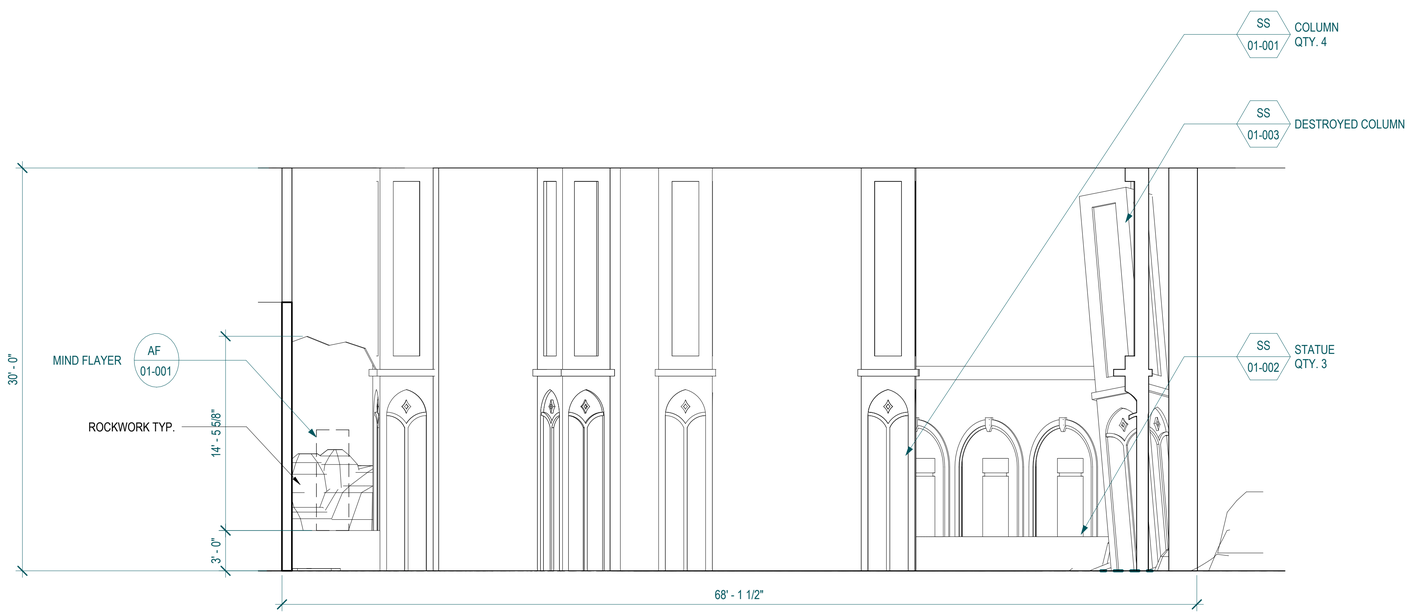

C D-01-302 **SECTION C - SCENE 01**

3/16" = 1'-0"

REF:D-01-101

PROJECT DESIGNED FOR:

PROJECT NAME:

Adventures in Faerûn: Siege of the Mind Flayer

NOT FOR CONSTRUCTION

NO.	DESCRIPTION	DATE

SHEET NAME:

SECTIONS - SCENE 01

DRAWING NO.:

D-01-302

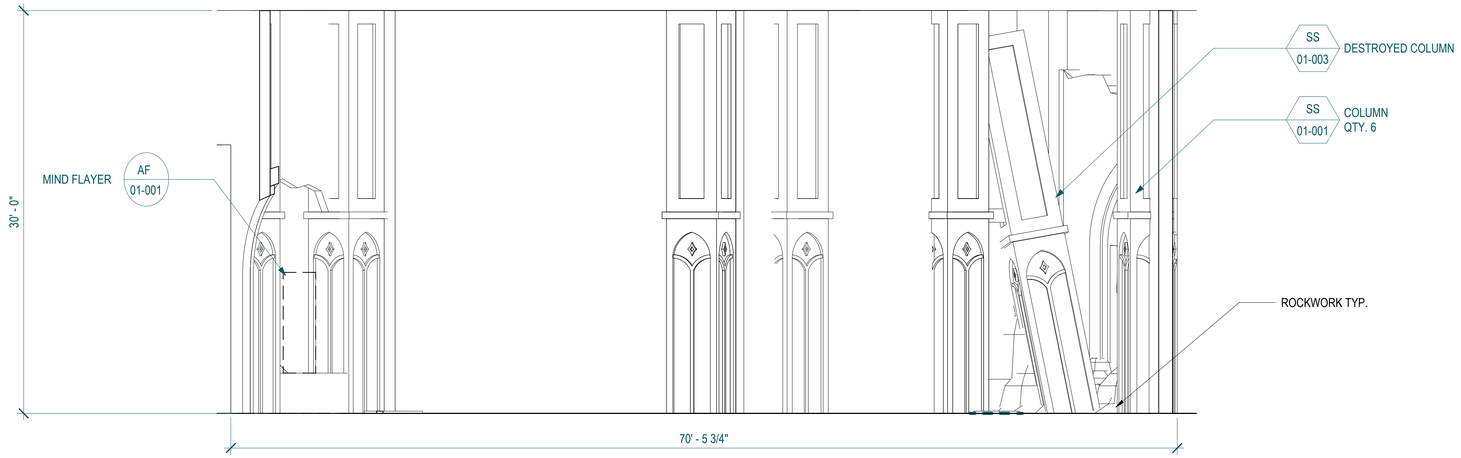

F D-01-303 **SECTION F - SCENE 01**

3/16" = 1'-0"

REF:D-01-101

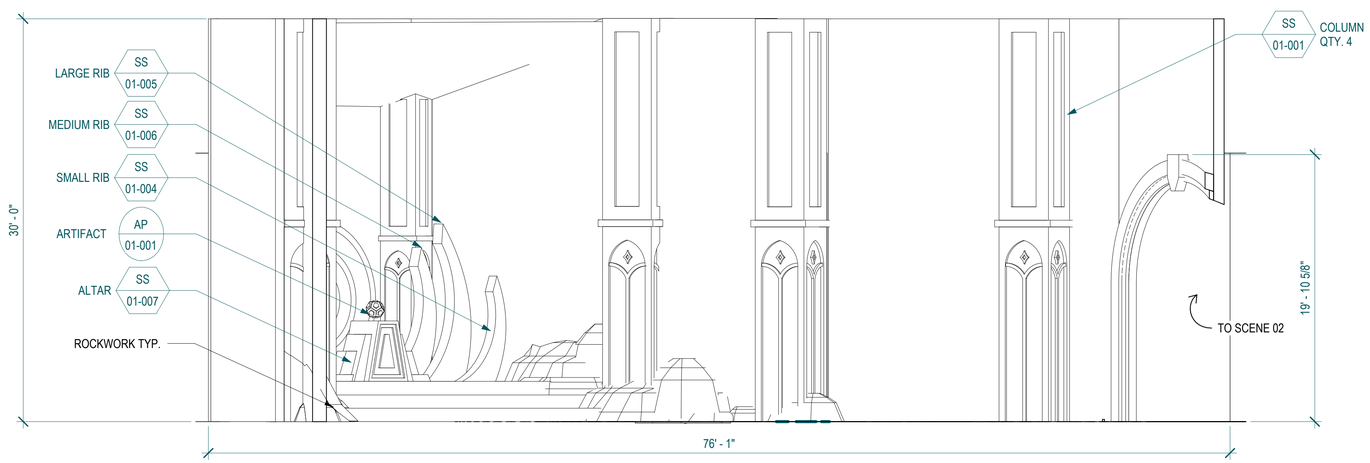

E D-01-303 **SECTION E - SCENE 01**

3/16" = 1'-0"

REF:D-01-101

PROJECT DESIGNED FOR:

PROJECT NAME:

Adventures in Faerûn: Siege of the Mind Flayer

NOT FOR CONSTRUCTION

NO.	DESCRIPTION	DATE

SHEET NAME:

SECTIONS - SCENE 01

DRAWING NO.:

D-01-303

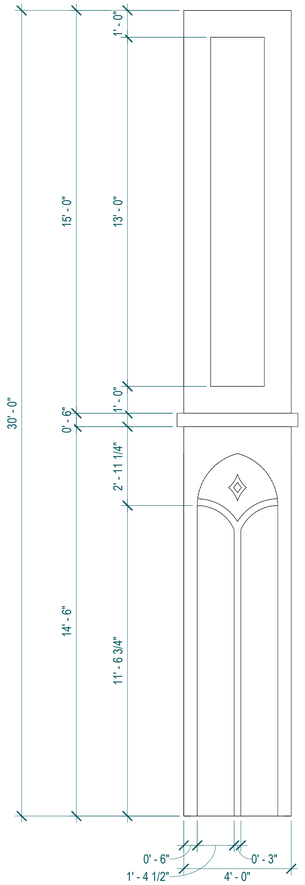

3 D-01-501 **COLUMN DETAIL RIGHT SIDE VIEW**

3/8" = 1'-0"

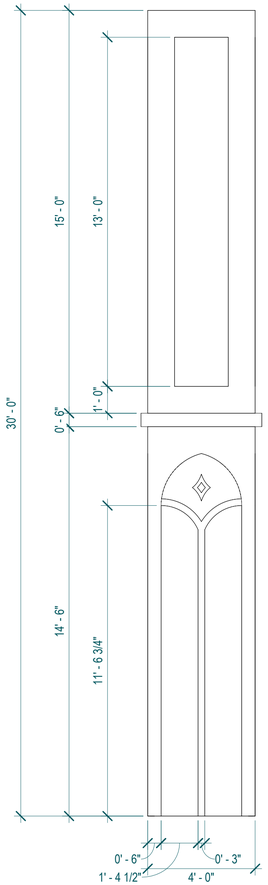

2 D-01-501 **COLUMN DETAIL FRONT VIEW**

3/8" = 1'-0"

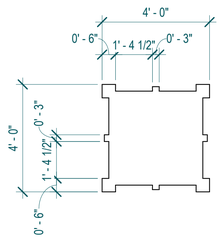

1 D-01-501 **COLUMN DETAIL PLAN VIEW**

3/8" = 1'-0"

PROJECT DESIGNED FOR:

PROJECT NAME:

Adventures in Faerûn: Siege of the Mind Flayer

NOT FOR CONSTRUCTION

NO.	DESCRIPTION	DATE

SHEET NAME:

DETAIL - COLUMN - SCENE 01

DRAWING NO.:

D-01-501

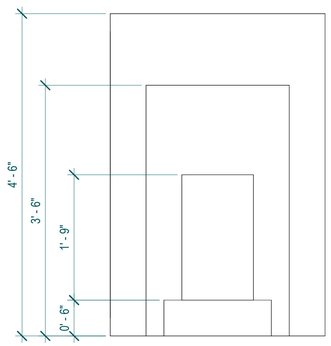

3 ALTAR DETAIL RIGHT SIDE VIEW

D-01-502 1" = 1'-0"

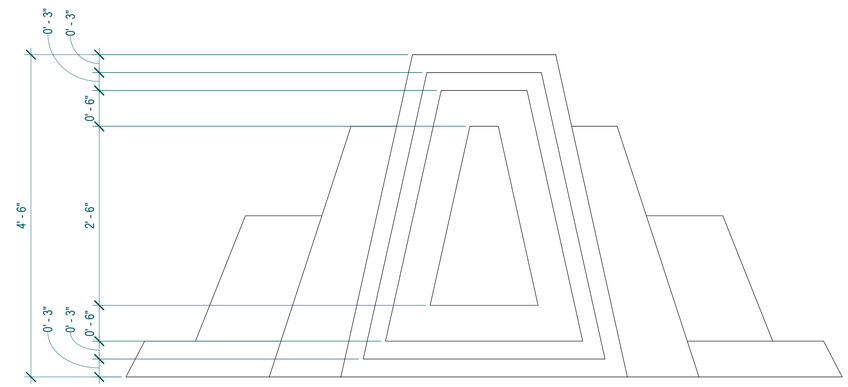

2 ALTAR DETAIL FRONT VIEW

D-01-502 1" = 1'-0"

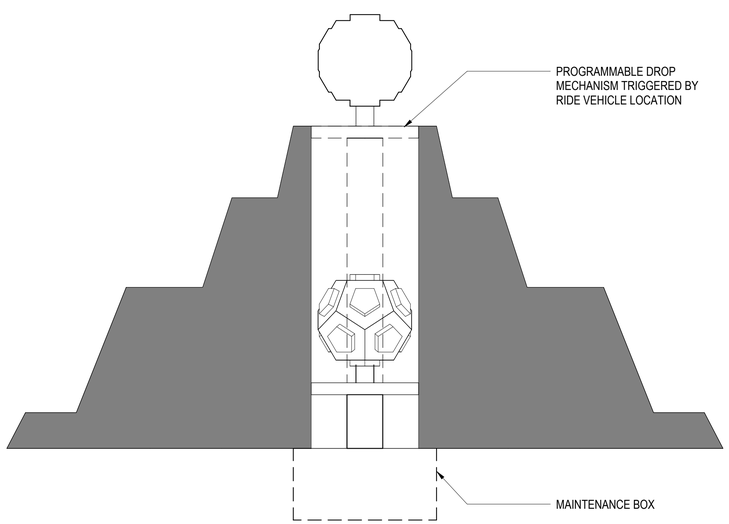

4 ALTAR DETAIL SECTION VIEW

D-01-502 1" = 1'-0"

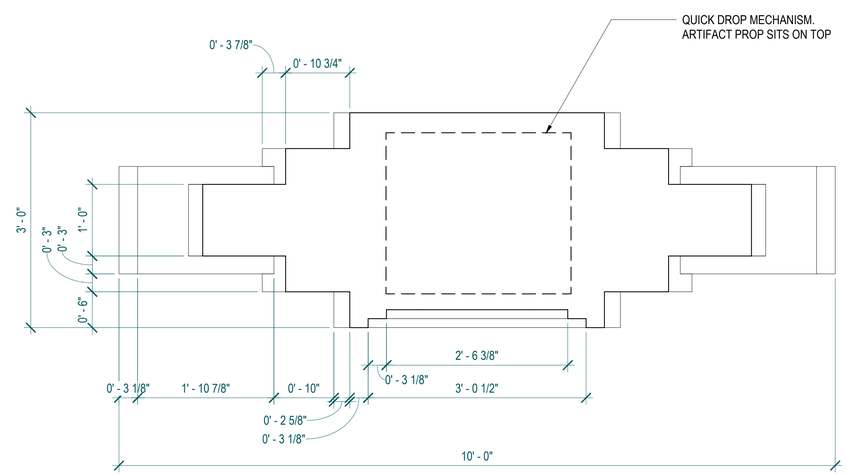

1 ALTAR DETAIL PLAN VIEW

D-01-502 1" = 1'-0"

PROJECT DESIGNED FOR:

PROJECT NAME:

Adventures in Faerûn: Siege of the Mind Flayer

NOT FOR CONSTRUCTION

NO.	DESCRIPTION	DATE

SHEET NAME:

DETAIL - ALTAR - SCENE 01

DRAWING NO.:

D-01-502

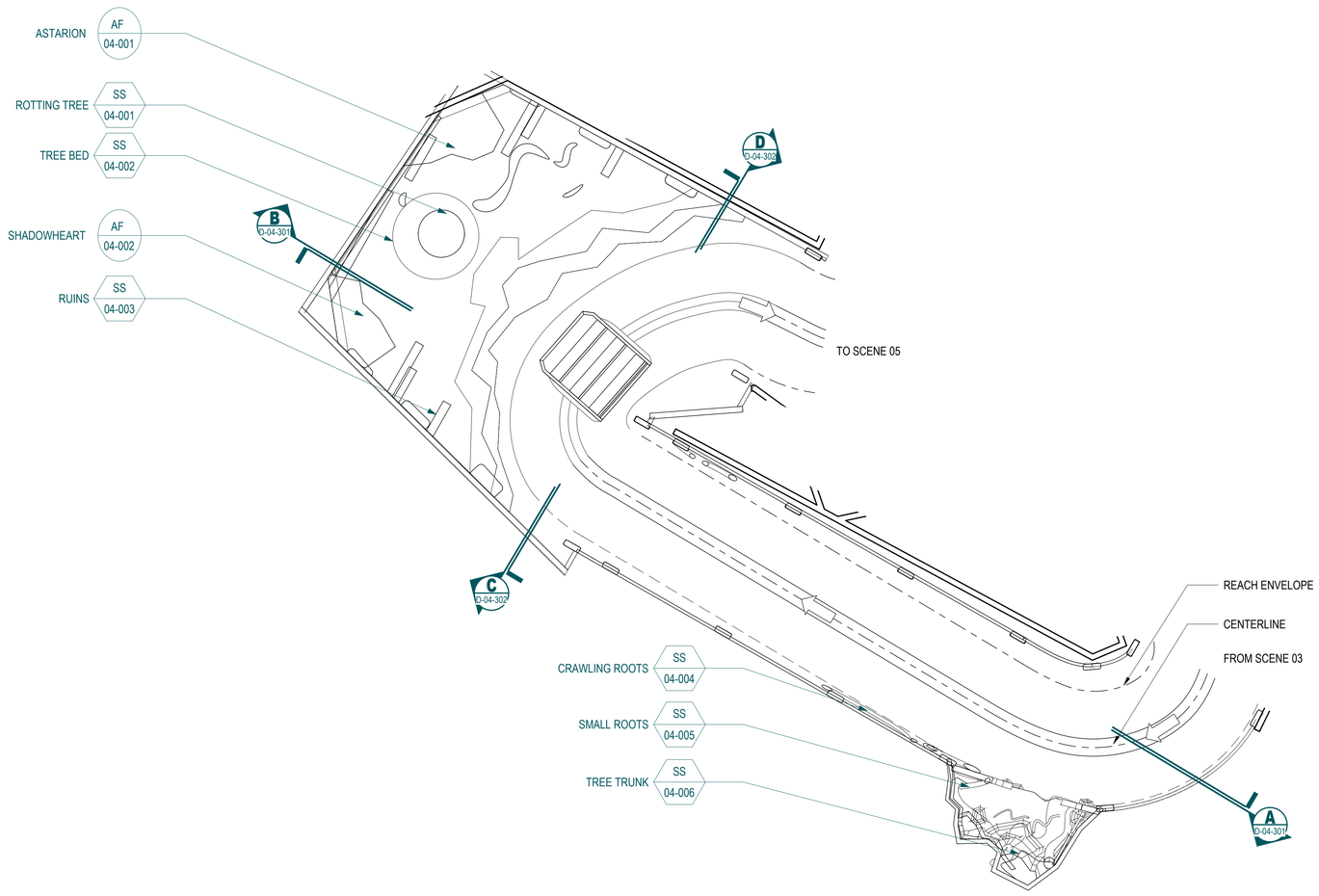

1
D-04-101

ENLARGED GROUND PLAN - SCENE 04

1/8" = 1'-0"

REF:D-100

PROJECT DESIGNED FOR:

PROJECT NAME:

Adventures in Faerûn: Siege of the Mind Flayer

NOT FOR CONSTRUCTION

NO.	DESCRIPTION	DATE

SHEET NAME:

ENLARGED PLAN - SCENE 04

DRAWING NO.:

D-04-101

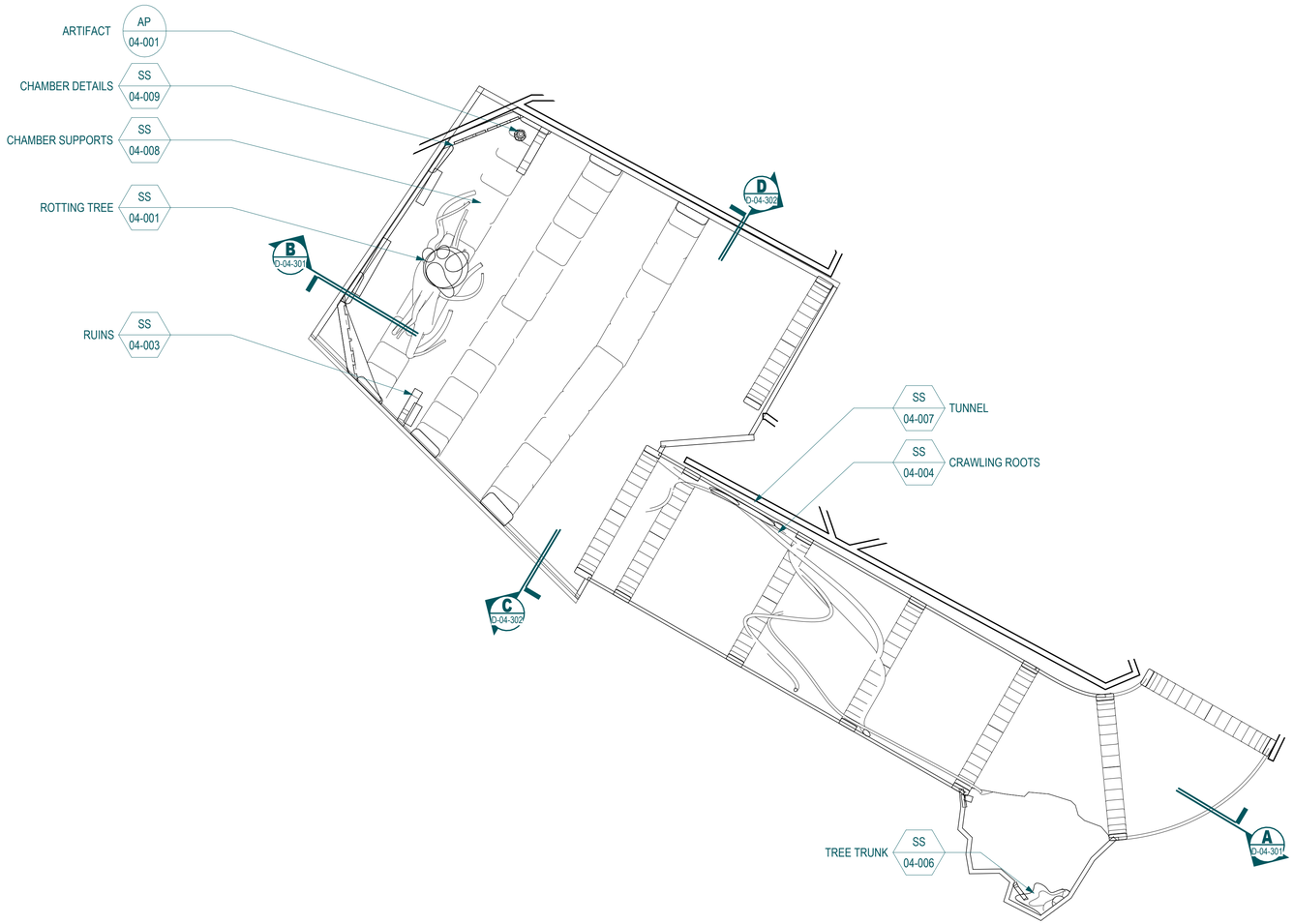

1 D-04-201 **ENLARGED REFLECTED CEILING PLAN - SCENE 04**

1/8" = 1'-0"

REF:D-200

PROJECT DESIGNED FOR:

PROJECT NAME:

Adventures in Faerûn: Siege of the Mind Flayer

NOT FOR CONSTRUCTION

NO.	DESCRIPTION	DATE

SHEET NAME:

REFLECTED CEILING PLAN - SCENE 04

DRAWING NO.:

D-04-201

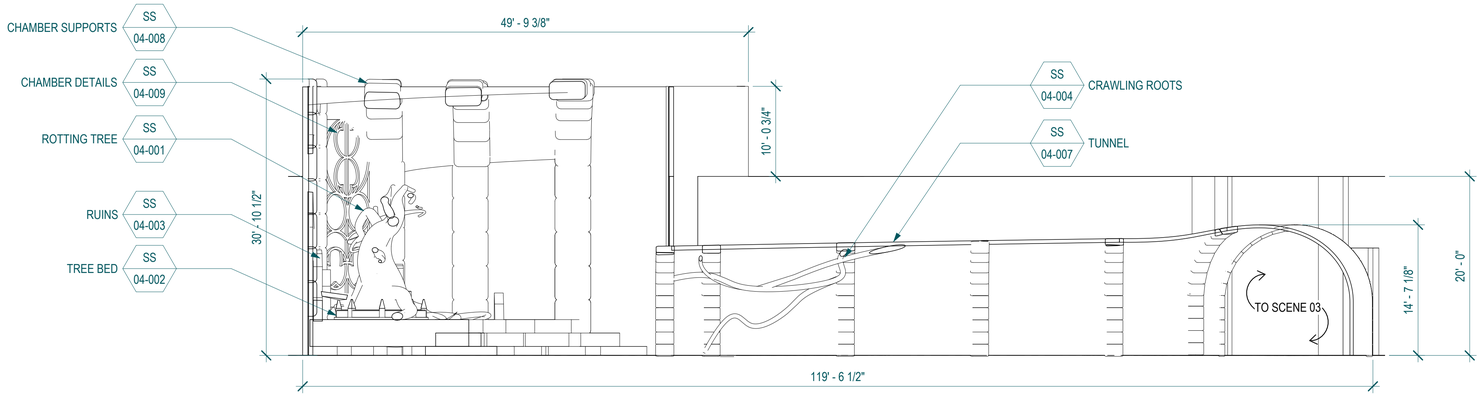

B D-04-301 **SECTION B - SCENE 04**

1/8" = 1'-0"

REF:D-04-101

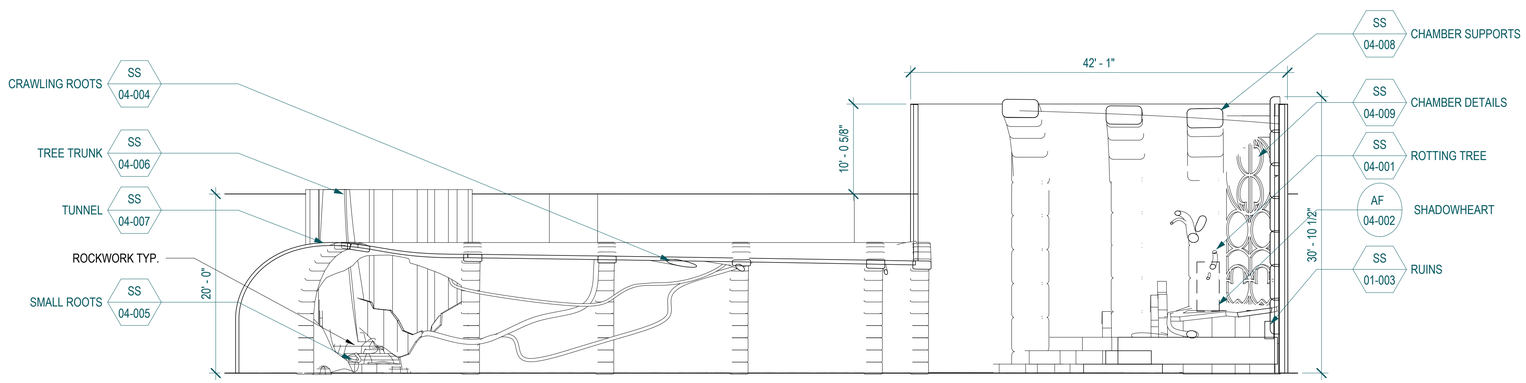

A D-04-301 **SECTION A - SCENE 04**

1/8" = 1'-0"

REF:D-04-101

PROJECT DESIGNED FOR:

PROJECT NAME:

Adventures in Faerûn: Siege of the Mind Flayer

NOT FOR CONSTRUCTION

NO.	DESCRIPTION	DATE

SHEET NAME:

SECTIONS - SCENE 04

DRAWING NO.:

D-04-301

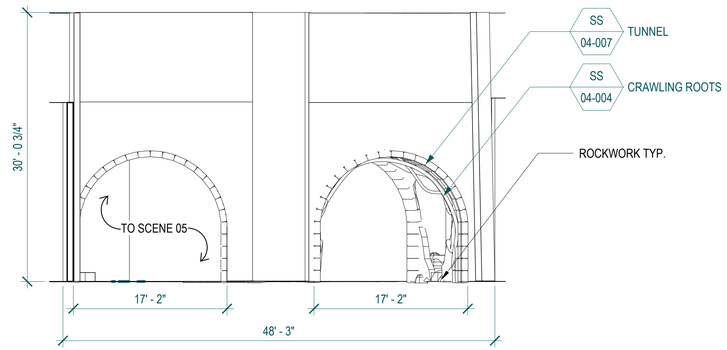

D D-04-302 **SECTION D - SCENE 04**

1/8" = 1'-0" REF:D-04-101

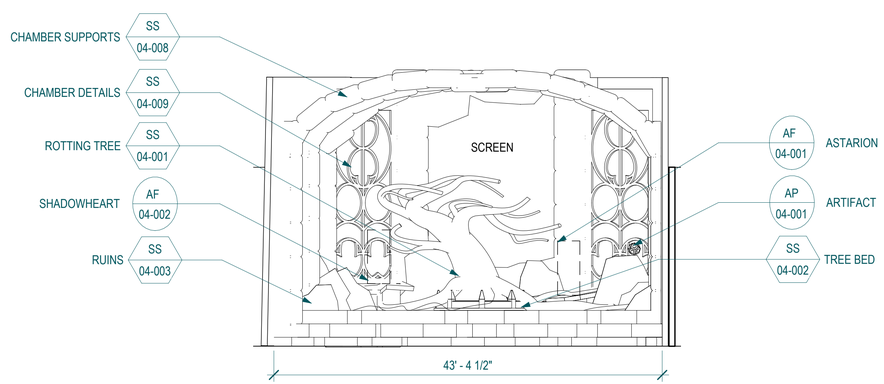

C D-04-302 **SECTION C - SCENE 04**

1/8" = 1'-0" REF:D-04-101

PROJECT DESIGNED FOR:

PROJECT NAME:

Adventures in Faerûn: Siege of the Mind Flayer

NOT FOR CONSTRUCTION

NO.	DESCRIPTION	DATE

SHEET NAME:

SECTIONS - SCENE 04

DRAWING NO.:

D-04-302

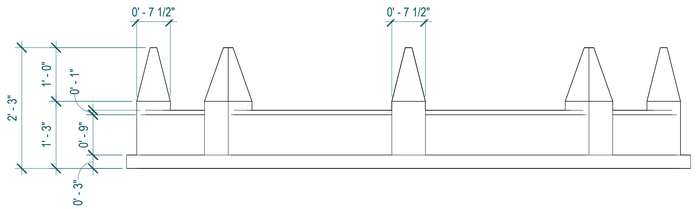

3 D-04-501 **TREE BED DETAIL RIGHT SIDE VIEW**

3/4" = 1'-0"

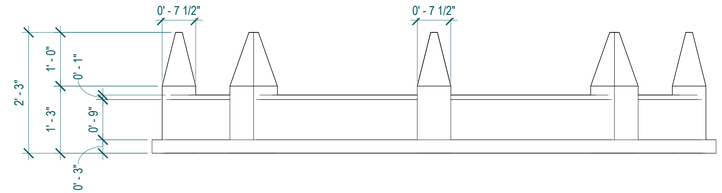

2 D-04-501 **TREE BED DETAIL FRONT VIEW**

3/4" = 1'-0"

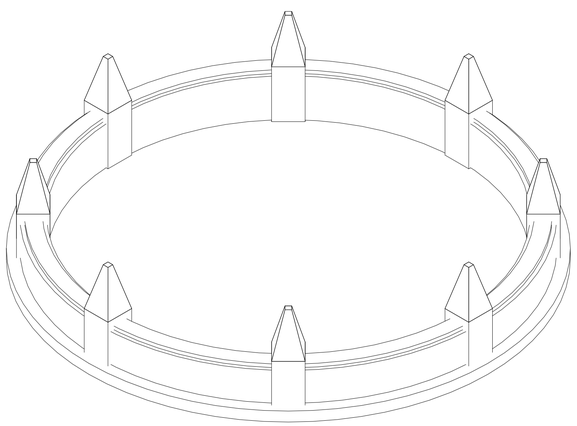

4 D-04-501 **TREE BED DETAIL ISO VIEW**

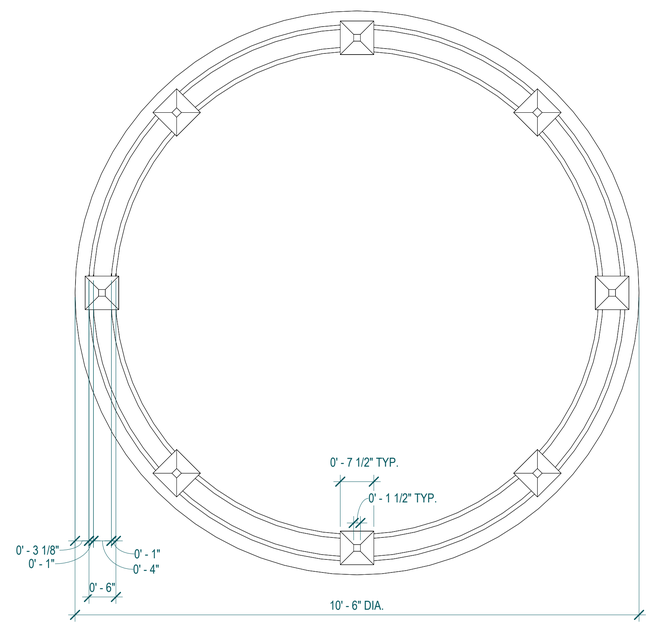

1 D-04-501 **TREE BED DETAIL PLAN VIEW**

3/4" = 1'-0"

PROJECT DESIGNED FOR:

PROJECT NAME:

Adventures in Faerûn: Siege of the Mind Flayer

NOT FOR CONSTRUCTION

NO.	DESCRIPTION	DATE

SHEET NAME:

DETAIL - TREE BED - SCENE 04

DRAWING NO.:

D-04-501

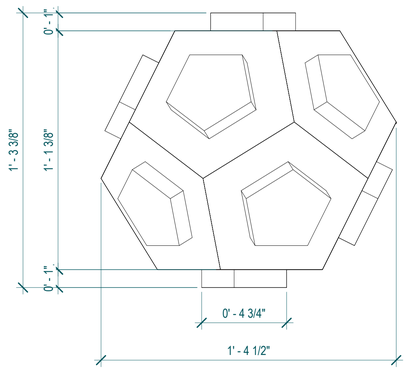

3 D-04-502 **ARTIFACT DETAIL RIGHT SIDE VIEW**

3" = 1'-0"

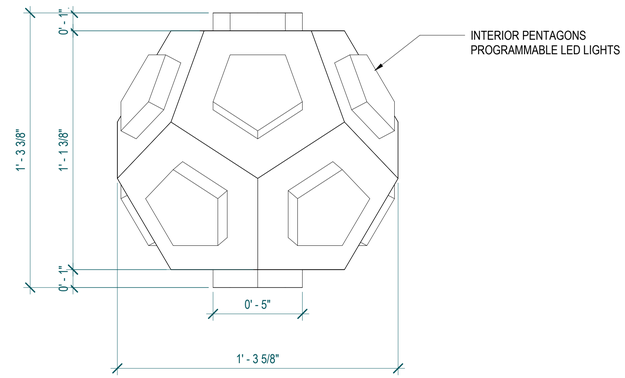

2 D-04-502 **ARTIFACT DETAIL FRONT VIEW**

3" = 1'-0"

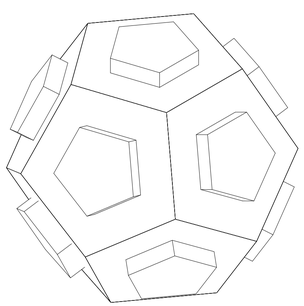

4 D-04-502 **ARTIFACT DETAIL ISO VIEW**

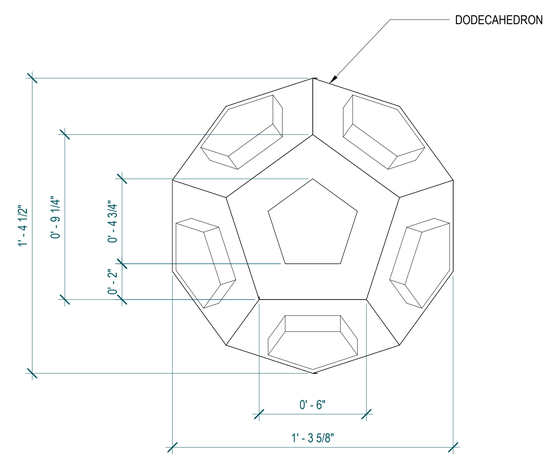

1 D-04-502 **ARTIFACT DETAIL PLAN VIEW**

3" = 1'-0"

PROJECT DESIGNED FOR:

PROJECT NAME:

Adventures in Faerûn: Siege of the Mind Flayer

NOT FOR CONSTRUCTION

NO.	DESCRIPTION	DATE

SHEET NAME:

DETAIL - ARTIFACT - SCENE 04

DRAWING NO.:

D-04-502